STECHNICS

FROZEN NF 200RGBW-MZ

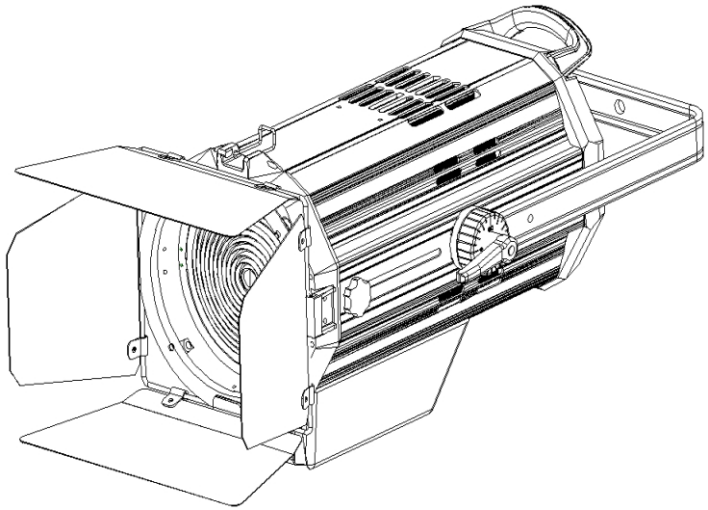

IP20 t_a 40℃ t_c 100℃

User Manual

KEEP THIS MANUAL FOR FUTURE NEEDS

1 SAFETY INSTRUCTIONS

CAUTION
Becareful with your operations.With a dangerous voltage you cansuffer a dangerous electric shock when touching wires!

This device has left the factory in perfect condition. In order to maintain this condition and to ensure a safe operation, it is absolutely necessary for the user to follow the safety instructions and warning notes written in this user manual.

IMPORTANT
Damages caused by the disregard of this user manual are not subject to warranty. The dealer will not accept liability for any resulting defects or problems.

If the device has been exposed to temperature changes due to environmental changes, do not switch it on immediately. The arising condensation could damage the device. Leave the device switched off until it has reached room temperature.

This device falls under protection-class I. Therefore it is essential that the device be earthed.

The electric connection must carry out by qualified person.

The device shall only be used with rate voltage and frequency.

Make sure that the available voltage is not higher than stated at the end of this manual.

Make sure the power cord is never crimped or damaged by sharp edges. If this would be the case, replacement of the cable must be done by an authorized dealer.

Always disconnect from the mains, when the device is not in use or before cleaning it. Only handle the power cord by the plug. Never pull out the plug by tugging the power cord.

During initial start-up some smoke or smell may arise. This is a normal process and does not necessarily mean that the device is defective, it should decrease gradually.

Please don't project the beam onto combustible substances.

Fixtures cannot be installed on combustible substances, keep more than 50cm distance with wall for smooth air flow, so there should be no shelter for fans and ventilation for heat radiation.

If the external flexible cable or cord of this luminaire is damaged, it shall be exclusively replaced by the manufacturer or his service agent or a similar qualified person in order to avoid a hazard.

9 MAINTENANCE AND CLEANING

The following points have to be considered during the inspection:

1) All screws for installing the devices or parts of the device have to be tightly connected and must not be corroded.
2) There must not be any deformations on the housing, color lenses, fixations and installation spots (ceiling, suspension, trussing).
3) Mechanically moved parts must not show any traces of wearing and must not rotate with unbalances.
4) The electric power supply cables must not show any damage, material fatigue or sediments.

Further instructions depending on the installation spot and usage have to be adhered by a skilled installer and any safety problems have to be removed.

CAUTION
Disconnect from mains before starting maintenance operation.

In order to make the lights in good condition and extend the life time, we suggest a regular cleaning to the lights.

1) Clean the inside and outside lens each week to avoid the weakness of the lights due to accumulation of dust.
2) Clean the fan each week.
3) A detailed electric check by approved electrical engineer each three month, make sure that the circuit contacts are in good condition, prevent the poor contact of circuit from overheating.

We recommend a frequent cleaning of the device. Please use a moist, lint- free cloth. Never use alcohol or solvents.

There are no serviceable parts inside the device. Please refer to the instructions under “Installation instructions”.

Should you need any spare parts, please order genuine parts from your local dealer.

8 DMX CHANNELS

9-channel mode

Serial number	Function	Description
Channel 1	Total dimming	R, G, B, W total dimming, linear dimming, from dark to bright
Channel 2	Stroboscopic	(0-255) Stroboscopic from slow to fast.
Channel 3	Red dimming	Red dimming, linear dimming, from dark to bright
Channel 4	Green dimming	Green dimming, linear dimming, from dark to bright
Channel 5	Blue dimming	Blue dimming, linear dimming, from dark to bright
Channel 6	White dimming	White dimming, linear dimming, from dark to bright
Channel 7	Color mixing	(0-255) 8 colors are evenly distributed.
Channel 8	Built-in program	(0-20) No function; When it is greater than 20, the corresponding built-in programs are evenly distributed.
Channel 9	Built-in program speed	0-255 Upward speed slows down, 0 fastest speed.

2 UNPACKING

The FROZEN NF 200RGBW-MZ is a series of high definition and ultra quiet LED studio wash light integrated into a die-cast aluminum alloy housing. It features brightest output and the boldest rendering of the colors. The 12°-65° manual zoom range and a beautifully soft/even wash with high CRI make the fixture an ideal LED replacement for aging incandescent fresnels.

The FROZEN NF 200RGBW-MZ are equiped with a very versatile dimming system with 4 preset dimming curves and reasonable LED driving frequency. The CRI is ≥90 (customizable). It's controllable by DMX512 or RDM.

The fixture comes with 4-leaf barn door system by which the users could adjust the projection coverage into samller spot.

The FROZEN NF 200RGBW-MZ are ideal for TV studios, conference rooms, museums, retail outlets, restaurants, light labs, and other small scale installations where size matters.

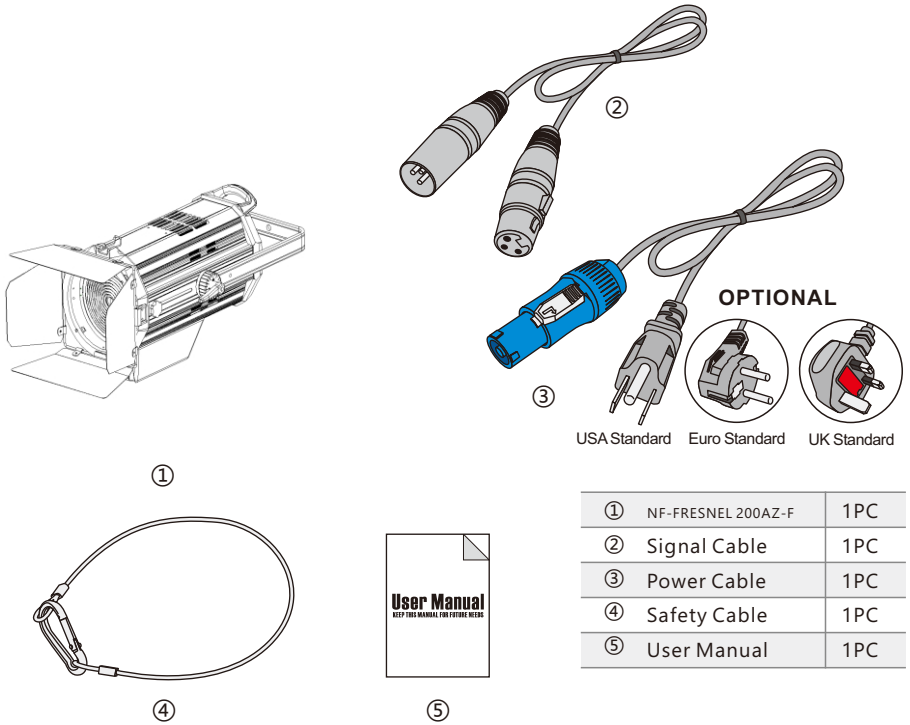

①	NF-FRESNEL 200AZ-F	1PC
②	Signal Cable	1PC
③	Power Cable	1PC
④	Safety Cable	1PC
⑤	User Manual	1PC

3 FEATURES & SPECIFICATIONS

Features

200W 4-IN-1 COB LED, RGBW
Flicker free operation for broadcast TV and FILM
Life Span: 50000H
A set of high resolution and precise optics
Manual zoom ragne: 12°-65°
4-Leaf rotating barn doors included
Color frame as optional
0-25Hz LED shutter/strobe effect with variable speed
0-100% Smooth linear LED dimming
4 Dimming curve modes, linear/square law/Inv square law/S-curve
9 DMX channels
RDM available (Remote Device Management)
DMX512, master-slave, or auto operation
DMX recorder and edit function integrated
Shielded input signal protection for stable signal without interference
3-Pin XLR DMX connectors IN/OUT
1.8" TFT LCD display
4 Control buttons
180°Reversible for LCD display
Display Auto OF
Advanced cooling system integrated aluminum and copper with liquid
Efficient noise free cooling system (no fan)
Constant temperature readout and management function
Over temperature protection management
Electronic supply with active PFC
AC100-240V 50/60Hz
PowerCON IN/ OUT
200W Power consumption
IP20 protection rating
Product Dimensions:540(D)*370(W)*281(H)mm
Packing Dimensions:410(D)*660(W)*360(H)mm
N.W.: 10.4kg
G.W.: 12.4kg

Serial number	English display		Chinese display		Description
1	DMX	Addr setting 001	Address setting 001		Press the up and down keys to adjust the address code. OK key save
2	Manual	Global DIM		Total brightness	(0-255) Total brightness level
		Strobe		Stroboscopic	(0-255) Stroboscopic adjustment from slow to fast.
		R-DIM		Red brightness	Press the up and down keys to adjust the red brightness, and confirm the key to save.
		G-DIM		Green brightness	Press the up and down keys to adjust the brightness of green light, and confirm the key to save.
		B-DIM		Blue brightness	Press the up and down keys to adjust the brightness of blue light, and confirm the key to
		W-DIM		White brightness	Press the up and down keys to adjust the brightness of white light, and confirm the key to save.
		Color Select		Color selection	Color mixing combination.
		Macro		Macro function	(0-20) No function; When it is greater than 20, the built-in programs are evenly distributed.
		Macro Speed		Macro velocity	(0-255) Macro function speed adjustment; 0 is the fastest and 255 is the slowest.
3	Test	PROG	Test	Built-in program 01	Press the up and down keys to select the built-in program. OK key save.
		PROG-SPEED		Program speed 16	Press the up and down keys to select the built-in program speed. OK key save.
		Test Auto/Sound		Test Self-moving/voice control	Press the up and down keys to enter the voice control and self-walking operation mode, and confirm the key to save.
4	Option	DmxChs	Settings	9CH	Press the up and down keys to select the channel mode.
		LCD inverse		Inverted display On/off	Select the display screen to display backwards.
		Back light		Backlight On/off	Set whether to turn off the backlight.
5	EN/CHS	English	Language	Chinese	Set Chinese and English display.
6	Info		Information		System version time and other information.

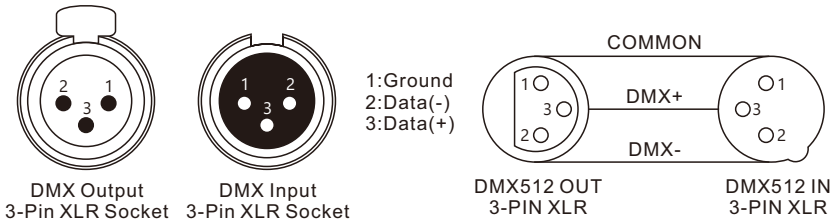

For installations where the DMX cable has to run a long distance or is in an electrically noisy environment, such as in a discotheque, it is recommended to use a DMX terminator. This helps in preventing corruption of the digital control signal by electrical noise. The DMX terminator is simply an XLR plug with a 120 Ω resistor connected between pins 2 and 3,which is then plugged into the output XLR socket of the last fixture in the chain. Please see illustrations below.

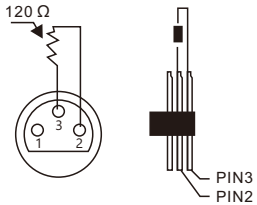

7 MENU OPERATIONS

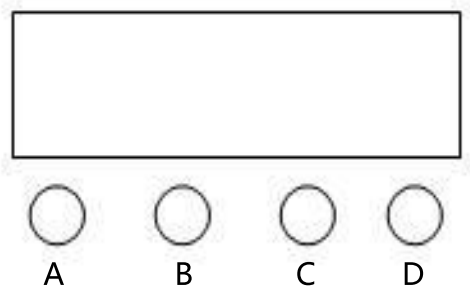

A. MENU

B. DOWN

C. UP

D. ENTER

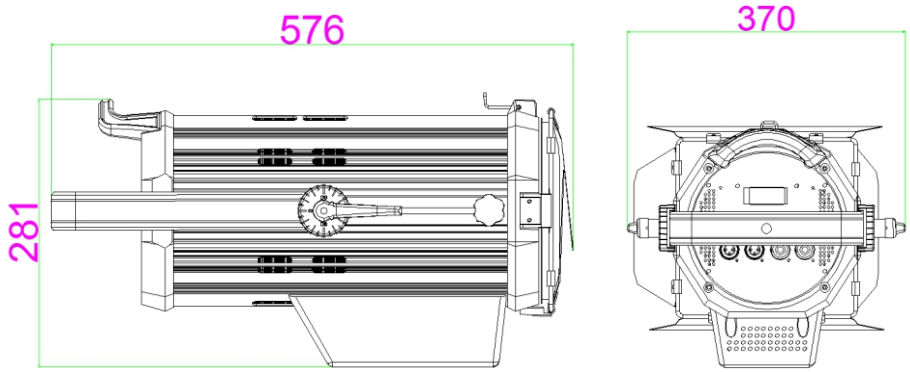

4 OPERATION INSTRUCTIONS

- The FROZEN NF 200RGBW-MZ is an LED wash light for on-site decoration purpose.
- Don't turn on the fixture if it's been through severe temperature difference like after transportation because it might damage the light due to the environment changes. So make sure to operate the fixture until it is in normal temperature.
- This light should be keep away from strong shaking during any transportation or movement.
- Don't pull up the light by only the head, or it might cause damages to the mechanical parts.
- Don't expose the fixture in overheat, moisture or environment with too much dust when installing it. And don't lay any power cables on the floor. Or it might cause electronic shock to the people.
- Make sure the installation place is in good safety condition before installing the fixture.
- Make sure to put the safety chain and check whether the screws are screwed properly when installing the fixture.
- Make sure the lens are in good condition. It's recommended to replace the units if there are any damages or severe scratch.
- Make sure the fixture is operated by qualified personnel who knows the fixture before using.
- Keep the original packages if any second shipment is needed.
- Don't try to change the fixtures without any instruction by the manufacturer or the appointed repairing agencies.
- It is not in warranty range if there are any malfunctions from not following the user manual to operate or any illegal operation, like shock short circuit, electronic shock, lamp broke, etc.

5 INSTALLATIONS

Cautions: For added protection mount the fixtures in areas outside walking paths, seating areas, or in areas were the fixture might be reached by unauthorized personnel.

Before mounting the fixture to any surface, make sure that the installation area can hold a minimum point load of 10 times the device's weight.

Fixture installation must always be secured with a secondary safety attachment, such as an appropriate safety cable.

Never stand directly below the device when mounting, removing, or servicing the fixture.

from a ceiling, or set on a flat level surface (see illustration below). Be sure this fixture is kept at least 16m away from any flammable materials (decoration etc.).

Always use and install the supplied safety cable as a safety measure to prevent accidental damage and/or injury in the event the clamp fails.

Mounting points: Overhead mounting requires extensive experience, including amongst others calculating working load limits, a fine knowledge of the installation material being used, and periodic safety inspection of all installation material and the fixture. If you lack these qualifications, do not attempt the installation yourself. Improper installation can result in bodily injury.

Be sure to complete all rigging and installation procedures before connecting the main power cord to the appropriate wall outlet.

Clamp Mounting: FROZEN NF 200RGBW-MZ provides a unique mounting bracket assembly, and the safety cable rigging point in one unit (see the illustration below). When mounting this fixture to truss be sure to secure an appropriately rated clamp to the handle using a M10 screw fitted through the center hole of the handle. As an added safety measure be sure to attached at least one properly rated safety cable to the fixture using on of the safety cable rigging point.

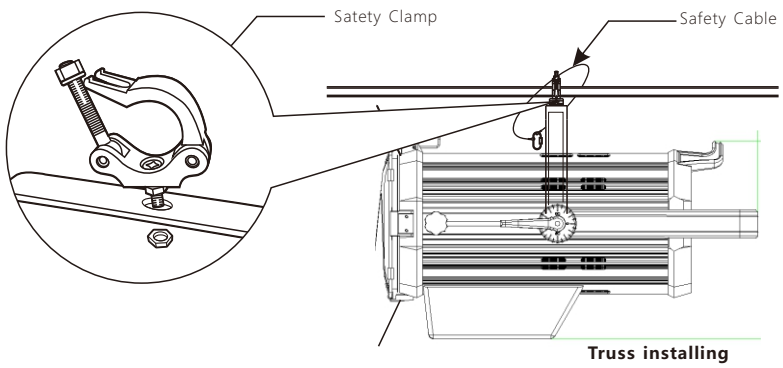

Regardless of the rigging option you choose for your FROZEN NF 200RGBW-MZ, always be sure to secure your fixture with a safety cable. The fixture provides a built-in rigging point for a safety cable on the hanging bracket as illustrated above. Be sure to only use the designated rigging point for the safety cable and never secure a safety cable to a carrying handle.

6 DMX-512 CONTROL CONNECTIONS

Connect the provided XLR cable to the female 3-pin XLR output of your controller and the other side to the male 3-pin XLR input of the studio light . You can chain multiple

Studio light together through serial linking. The cable needed should be two core, screened cable with XLR input and output connectors. Please refer to the diagram below.
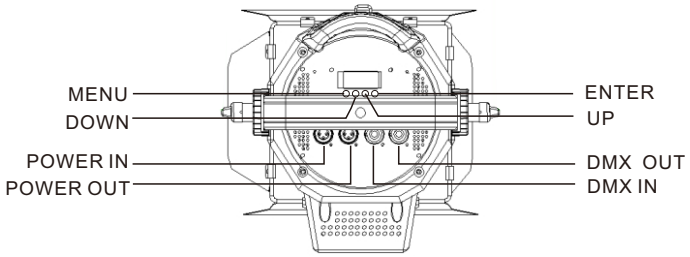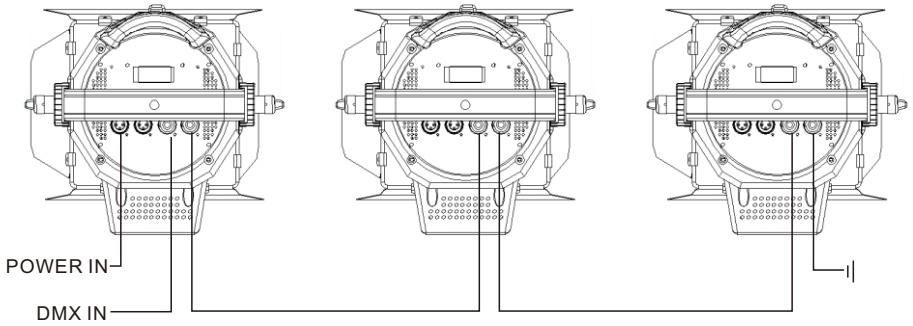
DMX-512 connection with DMX terminator